COMEUP WINCH

INDUSTRIAL WINCH

HYDRAULIC RECOVERY WINCH

Powered by a PTO (power take off) unit driven pump, COMEUP Hydraulic Recovery Winches feature a professional hydraulic system for "Working" applications at cost effective, extremely powerful, reliable, light weight and variable line speed for high work rate. They come with a drag brake and over-center valve providing complete braking without slip. The efficient and constant operating high torque motor supports professional applications in tough situations. All COMEUP hydraulic recovery winches are for particular applications such as rescuing and recovering vehicles, cargo trucks, vehicle recovery and many other commercial vehicles.

Features:

- Powered by an onboard hydraulic pump or PTO
- Fast and variable recovery speeds for high speed working
- Efficient and constant operating high torque motor
- 2-stage planetary gear train for greater pulling force
- Turn clutch by ergonomic T-handle for rapid wire rope payout
- Drag brake and over-center valve providing complete braking
- EN 14492-1 supported: 10:1 D/d ratio and 2:1 wire rope strength allow severe duty vehicles and commercial recovery
- Meet SAE J706 revised AUG 2003, CE Machinery Directive 2006/42/EC, and EN 14492-1:2006 Power Driven Winches (Except Bison 30/50).

Bison Series 20,000 ~ 50,000 lb

HV Series 8,000 ~ 15,000

Limited One (1) year Warranty.

COMEUP WINCH

Bison Series

20,000 - 30,000 - 50,000 lb pulling capacity

1. Powered by a PTO (power take off unit) driven pump with variable recovery speeds for high working.
2. Highly efficient and constant operating torque motor.
3. The Multi-Disc Brake (MDB) patented for holding full load
4. Hardened 2-stage planetary gear train provides faster line.
5. Built-in air clutch for rapid wire rope payout

Remark : Low pressure motor or EN Version available upon request

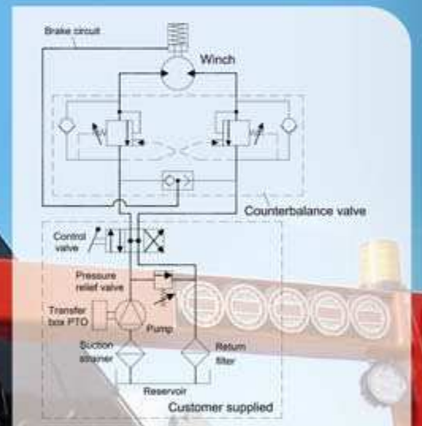

(Powered by PTO / power take off unit driven pump)
The installation of the counterbalance valve supplied is required for 100% braking

50,000 LB Hydraulic Recovery Winch

Note : Roller fairlead does not mount to winch

Bison 50 **PN 685010** Std. dum

• Meet SAE J706 revised AUG2003, CE Machinery Directive 2006/42/CE

SPECIFICATIONS :

Rated line pull : 22,680 kg (50,000 lb) SAE J706 ratings
Operation pressure : 200 bar / 2,900 psi
Max oil flow : 100 l/min (26.5 g/min)
Hydraulic motor : 251.8 cm^3 / rev (15.4 in^3 / rev)
Gear train & ratio : 2-stage planetary gear 44:1
Winch construction : Cast housings with steel drum
Clutch (Freespooling) : Output shaft disengaged
Brake : Multi-Disc Brake (MDB) patented and counterbalance valve supplied
Rotation of winch : Wire rope shall be under-wound orientation only
Drum barrel diameter : 180 mm (7.1")
Drum flange diameter : 406 mm (16")
Distance between flanges : 368 mm (14.5")
Mounting bolt pattern : 240 x 453 mm (9.5" x 17.8") ; 340 x 453 mm (13.4" x 17.8")
305 kN (68,442 lbf)
Wire rope recommended : 22.4 mm x 48 m (7/8" x 157') 1,770 N/mm^2 (EIPS) breaking strength of 305 kN required for SAE J706 ratings.
Winch weight : 375 kg / 827 lb
Gross weight : 410 kg / 904 lb
Box dimension : 1,170 x 630 x 670 mm (46" x 24.8" x 26.4")

PERFORMANCE DATA :

Line Pull and Rope Capacity			Line Speed
Layer of Wire Rope	Pull by Layer, kg / lb	Total Rope on the Drum, m / ft	at 100 l/min (26.5 g/min), mpm / fpm
1st	22,680 / 50,000	10 / 33	5.7 / 19
2nd	18,570 / 40,940	22 / 72	7.0 / 23
3rd	15,720 / 34,660	36 / 118	8.3 / 27
4th	13,630 / 30,050	48 / 157	9.6 / 31

DIMENSION mm/in :

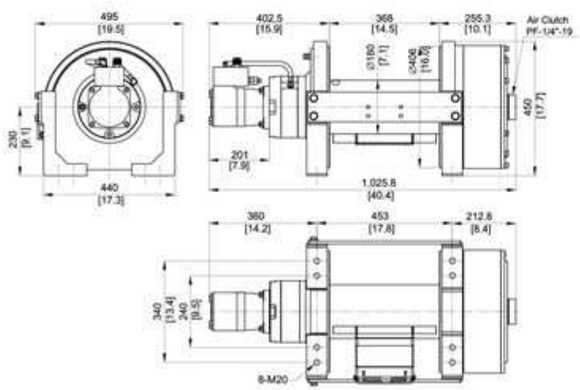

30,000 LB Hydraulic Recovery Winch

Note : Roller fairlead does not mount to winch

Bison 30 **PN 683030** Std. dum
PN 683352 Long dum

• Meet SAE J706 revised AUG2003, CE Machinery Directive 2006/42/CE

SPECIFICATIONS :

Rated line pull : 13,600 kg (30,000 lb) SAE J706 ratings
Operation pressure : 175 bar / 2,540 psi
Max oil flow : 60 l/min (15.9 g/min)
Hydraulic motor : 155.7 cm^3 / rev (9.5 in^3 / rev)
Gear train & ratio : 2-stage planetary gear 41:1
Winch construction : Cast housings with steel drum
Clutch (Freespooling) : Output shaft disengaged
Brake : Multi-Disc Brake (MDB) patented and counterbalance valve supplied
Rotation of winch : Wire rope shall be under-wound orientation only
Drum barrel diameter : 152.5 mm (6")
Drum flange diameter : 343 mm (13.5")
Distance between flanges : 203.2 mm (8") - Std. drum; 355.6 mm (14") - Long drum
Mounting bolts pattern :
Std. drum - 190.5 x 304.8 mm (7.5" x 12"); 266.7 x 304.8 mm (10.5" x 12")
Long drum - 190.5 x 457.2 mm (7.5" x 18"); 266.7 x 457.2 mm (10.5" x 18")
Wire rope recommended : 16 mm x 43 m (5/8" x 141') for Std. drum and 75 m (246') for Long drum, 1,960 N/mm^2 (EIPS) grade with a minimum breaking strength of 179 kN (40,167 lbf) required for SAE J706 ratings.
Winch weight : 175 kg / 386 lb (Std. drum); 197 kg / 434 lb (Long drum)
Gross weight : 198 kg / 437 lb (Std. drum); 235 kg / 518 lb (Long drum)
Box dimension :
900 x 510 x 530 mm (35.4" x 20.1" x 20.9") - Std. drum
1,040 x 620 x 510 mm (40.9" x 24.4" x 20.1") - Long drum

PERFORMANCE DATA :

Line Pull and Rope Capacity				Line Speed
Layer of Wire Rope	Pull by Layer, kg / lb	Total Rope on the Drum, m / ft Std. drum	Long drum	at 60 l/min (15.9 g/min), mpm / fpm
1st	13,600 / 30,000	6 / 20	11 / 36	5.0 / 16
2nd	11,438 / 25,216	14 / 44	25 / 82	5.9 / 19
3rd	9,864 / 21,745	22 / 73	40 / 131	6.9 / 23
4th	8,670 / 19,115	32 / 104	58 / 190	7.8 / 26
5th	7,735 / 17,052	43 / 141	75 / 246	8.8 / 29

DIMENSION mm/in :

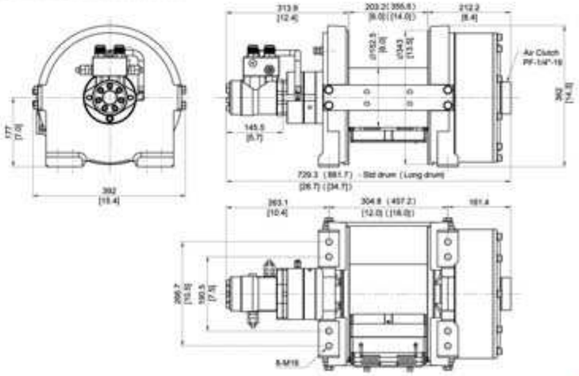

Bison 20

20,000 LB Hydraulic Recovery Winch

Note : Roller fairlead does not mount to winch

EN 14492-1 COMPLIANT

Bison 20 PN 682030 Std. dum
PN 682169 Long dum

- Meet SAE J706 revised AUG2003, CE Machinery Directive 2006/42/CE and EN 14492-1:2006 Power Driven WInches

SPECIFICATIONS :

Rated line pull : 9,070 kg (20,000 lb) EN 14492-1 rating & SAE J706 rating
Operation pressure : 175 bar / 2,540 psi
Max oil flow : 60 l/min (15.9 g/min)
Hydraulic motor : 155.7 cm^3 / rev (9.5 in^3 / rev)
Gear train & ratio : 2-stage planetary gear 30:1
Winch construction : Cast housings with steel drum
Clutch (Freespooling) : Output shaft disengaged
Brake : Multi-Disc Brake (MDB) patented and counterbalance valve supplied
Rotation of winch : Wire rope shall be under-wound orientation only
Drum barrel diameter : 146 mm (5.8")
Drum flange diameter : 314 mm (12.4")
Distance between flanges : 203.2 mm (8") - Std. drum ; 355.6 mm (14") - Long drum
Mounting bolts pattern :
Std. drum - 190.5 x 304.8 mm (7.5" x 12") ; 266.7 x 304.8 mm (10.5" x 12")
Long drum - 190.5 x 457.2 mm (7.5" x 18") ; 266.7 x 457.2 mm (10.5" x 18")
Wire rope recommended :
*14 mm x 43 m (9/16" x 141') for Std. drum and 80 m (262') for Long drum, 1,960 N/mm^2 (EIPS) grade with a minimum breaking strength of 137 kN (30,472 lbf) required for SAE J706 rating.
*16 mm x 30 m (5/8" x 98') for Std. drum and 55 m (180') for Long drum, 1,960 N/mm^2 (EIPS) grade with a minimum breaking strength of 179 kN (40,167 lbf) required for EN 14492-1 rating.
Winch weight : 135 kg / 298 lb (Std. drum) ; 150 kg / 331 lb (Long drum)
Gross weight : 165 kg / 364 lb (Std. drum) ; 195 kg / 430 lb (Long drum)
Box dimension :
870 x 500 x 510 mm (34.3" x 19.7" x 20.1") - Std. drum
1,025 x 500 x 510 mm (40.4" x 19.7" x 20.1") - Long drum

PERFORMANCE DATA :

Line Pull and Rope Capacity						Line Speed
Layer of Wire Rope	Pull by Layer, kg / lb	Total Rope on the Drum, m / ft — Std. drum 14 mm rope	Std. drum 16 mm rope	Long drum 14 mm rope	Long drum 16 mm rope	at 60 l/min (15.9 g/min), mpm / fpm
1st	9,070 / 20,000	7 / 23	6 / 20	12 / 39	11 / 36	7.1 / 23
2nd	7,719 / 17,017	15 / 49	13 / 43	27 / 89	24 / 79	8.3 / 27
3rd	6,719 / 14,813	24 / 79	21 / 69	43 / 141	39 / 128	9.5 / 31
4th	5,948 / 13,113	34 / 112	30 / 98	62 / 203	55 / 180	10.8 / 35
5th	5,335 / 11,762	43 / 141	-	80 / 262	-	12 / 39

DIMENSION mm/in :

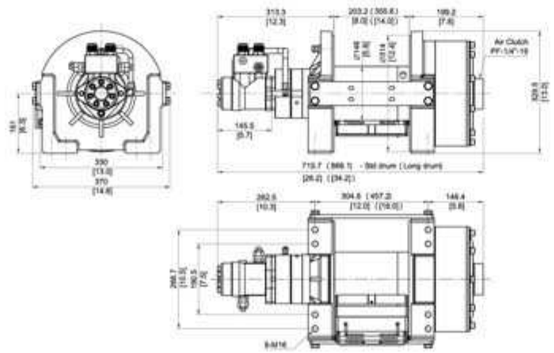

HV Series

8,000 - 10,000 - 12,000 - 15,000 lb pulling capacity

Note : Roller fairlead does not mount to winch.
Clutch in left side.

EN 14492-1 COMPLIANT

- Meet SAE J706 revised AUG2003, CE Machinery Directive 2006/42/EC, and EN 14492-1:2006 Power Driven Winches.

1. **Powered by a PTO Device**
   Adjustable oil flow and pressure allow variable line pull and speed.
2. **Extreme Motor**
   Highly efficient and constant operating torque output.
3. **Doubled Failsafe Brakes**
   Mechanical drag brake and over-center valve provided for holding full load.
4. **Outstanding and Elegant Design**
   Aluminum die cast housings with steel drum.
5. **2-stage Planetary Gear Train**
   Less gear reduction ratio for maximum rated line speed.
6. **Turn Clutch by Ergonomic T-handle for Rapid Wire Rope Payout**
   Easy to turn the T-handle for rapid wire rope payout and workable for left or right side location.

Compliant with EN 14492-1 requirements for recovery winch:
** The working coefficient for the first rope layer on the drum shall be at least 2.*
** The D/d ratio to the center of the rope shall be at least 10 for the drum.*
** Drum freeboard shall be at least 1.5 x rope diametec*

Hydraulic System Installation
(Powered by a PTO/power take off unit driven pump)

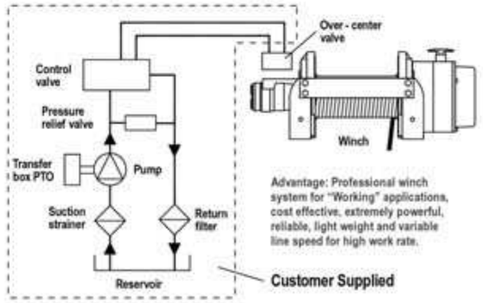

Advantage: Professional winch system for "Working" applications, cost effective, extremely powerful, reliable, light weight and variable line speed for high work rate.

15,000 - 12,000 LB Hydraulic Recovery Winch

Note : Roller fairlead does not mount to winch

HV-15 **PN 686732** (Std. drum) / **PN 687548** (Std. drum, Clutch in left side)
HV-12 **PN 684311** (Std. drum) / **PN 685433** (Std. drum, Clutch in left side)
* Meet SAE J706 revised AUG2003, CE Machinery Directive 2006/42/EC and EN 14492-1: 2006 Power Driven Winches

SPECIFICATIONS :

Rated line pull :
HV-15 : 6,800 kg (15,000 lb) EN 14492-1 rating & SAE J706 rating
HV-12 : 5,440 kg (12,000 lb) SAE J706 rating
5,100 kg EN 14492-1 rating
Operation pressure : 150 bar / 2,175 psi
Max oil flow : 60 l/min (15.9 g/min)
Hydraulic motor :
HV-15 : 156 cm³ / rev (9.5 in³ / rev)
HV-12 : 125 cm³ / rev (7.6 in³ / rev)
Gear train & ratio : 2-stage planetary, 19.4:1
Winch construction : Aluminum die cast housings with steel drum
Clutch (freespooling) : Rotating ring gear
Brake : Spring applied drag brake together with over-center valve supplied
Rotation of winch : Wire rope shall be under-wound orientation only
Drum barrel diameter :
HV-15 : 127 mm (5.0")
HV-12 : 114.3 mm (4.5")
Drum flange diameter : 252 mm (9.9")
Drum between flanges : 255 mm (10.0")
Mounting bolts pattern :
303.5 mm x 114.3 mm (12.0" x 4.5")
368.5 mm x 171.2 mm (14.5" x 6.7")
Wire rope recommended :
HV-15 : 14 mm x 27 m (9/16" x 89'), 1,960 N/mm² (EIPS) grade with a minimum breaking strength of 137 KN (30,742 lbf) required for SAE J706 and EN 14492-1 ratings
HV-12 : 12 mm x 39 m (1/2" x 128'), 1,960 N/mm² (EIPS) grade with a minimum breaking strength of 100.5 KN (22,552 lbf) required for SAE J706 and EN 14492-1 ratings
Winch weight :
HV-15 : 72 kg / 158.7 lb
HV-12 : 71 kg / 156.5 lb
Gross weight :
HV-15 : 88 kg / 194 lb
HV-12 : 87 kg / 191.8 lb
Box dimension, (L x D x H) : 735 x 430 x 335 mm (29" x 16.9" x 13.2")

PERFORMANCE DATA :

Line Pull and Rope Capacity

HV-15	Line Pull and Rope Capacity		Line Speed
Layer of Wire Rope	Pull by Layer, kg / lb	Total Rope on the Drum, m / ft	at 60 l/min (15.9 g/min), mpm / fpm
1st	6,800 / 15,000	7.8 / 25.6	9.0 / 30.0
2nd	5,637 / 12,507	17.3 / 56.8	10.5 / 34.4
3rd	4,867 / 10,507	27.0 / 89.0	12.3 / 40.4

HV-12	Line Pull and Rope Capacity		Line Speed
Layer of Wire Rope	Pull by Layer, kg / lb	Total Rope on the Drum, m / ft	at 60 l/min (15.9 g/min), mpm / fpm
1st	5,440 / 12,000	8.2 / 26.9	10.0 / 33.0
2nd	4,570 / 10,075	18.0 / 59.1	11.6 / 38.1
3rd	3,939 / 8,684	29.3 / 96.1	13.5 / 44.3
4th	3,462 / 7,632	39.0 / 128.0	15.4 / 50.5

DIMENSION mm/in :

HV-15

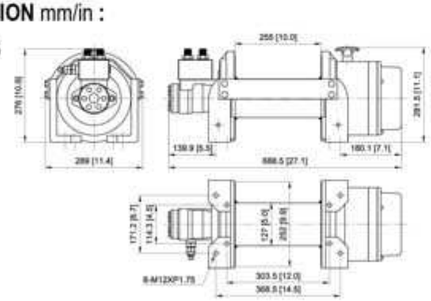

HV-12

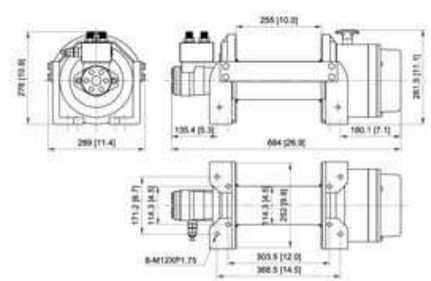

10,000 - 8,000 LB Hydraulic Recovery Winch

Note : Roller fairlead does not mount to winch

HV-10 **PN 682546** (Std. drum) / **PN 683129** (Std. drum, Clutch in left side)
* Meet SAE J706 revised AUG2003, CE Machinery Directive 2006/42/EC and EN 14492-1: 2006 Power Driven Winches

HV-8 **PN 680816** (Std. drum) / **PN 681091** (Long drum)
PN 681123 (Std. drum, Clutch in left side)
PN 681347 (Long drum, Clutch in left side)

SPECIFICATIONS :

Rated line pull :
HV-10 : 4,535 kg (10,000 lb) SAE J706 rating
4,300 kg EN 14492-1 rating
HV-8 : 3,630 kg (8,000 lb) SAE J706 rating
3,560 kg EN 14492-1 rating
Operation pressure : 150 bar / 2,175 psi
Max oil flow : 60 l/min (15.9 g/min)
Hydraulic motor :
HV-10 : 97.3 cm³ / rev (5.9 in³ / rev)
HV-8 : 77.8 cm³ / rev (4.7 in³ / rev)
Gear train & ratio : 2-stage planetary, 16:1
Winch construction : Aluminum die cast housings with steel drum
Clutch (freespooling) : Rotating ring gear
Brake : Spring applied drag brake together with over-center valve supplied
Rotation of winch : Wire rope shall be under-wound orientation only
Drum barrel diameter : HV-10 : 102 mm (4.0") / HV-8: 90 mm (3.5")
Drum flange diameter : 201.5 mm (7.9")
Drum between flanges : HV-10 & HV-8 (Long drum) : 253 mm (10")
HV-8 (Std. drum) : 190 mm (7.5")
Mounting bolts pattern :
HV-10 & HV-8 (Long drum) :
291.6 mm x 171.2 mm (11.5" x 6.7") / 374.2 mm x 114.3 mm (14.7" x 4.5")
HV-8 (Std drum) :
228.6 mm x 171.2 mm (9.0" x 6.7") / 311.2 mm x 114.3 mm (12.3" x 4.5")
Wire rope recommended :
HV-10 : 11 mm x 27 m (7/16" x 89'), 1,960 N/mm² (EIPS) grade with a minimum breaking strength of 84.4 KN (18,939 lbf) required for SAE J706 and EN 14492-1 ratings
HV-8 : 10 mm x 30.5 m (3/8" x 100') for Std. drum and 40 m (131') for long drum, 1,960 N/mm² (EIPS) grade with a minimum breaking strength of 69.8 KN (15,663 lbf) required for SAE J706 and EN 14492-1 ratings
Winch weight : HV-10 : 37 kg / 81.4 lb
HV-8 (Std. drum) : 35.5 kg / 78.1 lb ; HV-8 (Long drum) : 37.5 kg / 82.7 lb
Gross weight : HV-10 : 46.6 kg / 102.5 lb
HV-8 (Std. drum) : 43.3 kg / 95.3 lb ; HV-8 (Long drum) : 45.3 kg / 99.9 lb
Box dimension, (L x D x H) :
HV-10 & HV-8 (Long drum) : 680 x 380 x 300 mm (26.8" x 15" x 11.8")
HV-8 (Std. drum) : 615 x 380 x 300 mm (24.2" x 15" x 11.8")

PERFORMANCE DATA :

Line Pull and Rope Capacity

HV-10	Line Pull and Rope Capacity		Line Speed
Layer of Wire Rope	Pull by Layer, kg / lb	Total Rope on the Drum, m / ft	at 60 l/min (15.9 g/min), mpm / fpm
1st	4,535 / 10,000	8.0 / 26.2	14.0 / 46.0
2nd	3,796 / 8,369	17.5 / 57.4	16.3 / 53.5
3rd	3,264 / 7,196	27.0 / 89.0	19.0 / 62.3

HV-8	Line Pull and Rope Capacity			Line Speed
Layer of Wire Rope	Pull by Layer, kg / lb	Total Rope on the Drum, m / ft Std. drum	Long drum	at 60 l/min (15.9 g/min), mpm / fpm
1st	3,630 / 8,000	5.8 / 19.0	7.8 / 25.6	15.0 / 49.0
2nd	3,025 / 6,669	12.8 / 42.0	17.1 / 56.1	18.2 / 59.7
3rd	2,593 / 5,717	20.9 / 68.6	28.0 / 91.9	21.2 / 69.6
4th	2,269 / 5,002	30.5 / 100	40 / 131	24.2 / 79.4

DIMENSION mm/in :

HV-10

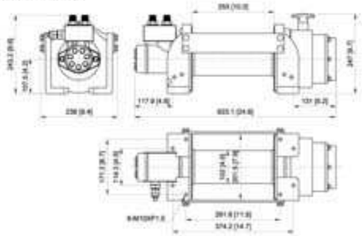

HV-8

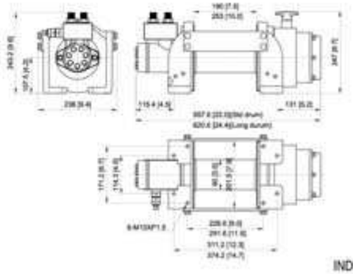

HYDRAULIC WORM GEAR WINCH

EN 14492-1 COMPLIANT

- Powered by an onboard hydraulic pump or PTO
- Fast and variable recovery speeds for high working rate
- High efficient and constant-operating torque motor
- Irreversible single stage worm gear provides instant braking and slip free operation
- An ergonomic T-handle for rapid wire rope payout
- Heavy duty roller fairlead with grease zerk fittings
- EN 14492-1 supported: 10:1 D/d ratio, 2:1 wire rope strength and 1.5d freeboard for severe duty car and commercial recovery
- Standard Compliance : SAE J706, CE Machinery Directive 2006/42/EC, and EN 14492-1:2006 Power Driven Winches.

Compliant with EN 14492-1 requirements for recovery winch:

* The working coefficient for the first rope layer on the drum shall be at least 2.
* The D/d ratio to the center of the rope shall be at least 10 for the drum.
* Drum freeboard shall be at least 1.5 x rope diameter.

Hydraulic System

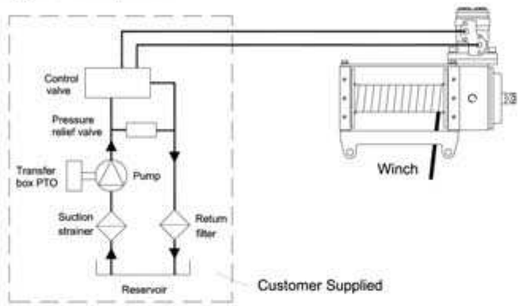

COMEUP WINCH

7,000 LB Hydraulic Worm Gear Winch

Note : Roller fairlead does not mount to winch

Yak 7 PN 681260 Std. dum | PN 681266 Long dum

* Meet SAE J706 revised AUG2003, CE Machinery Directive 2006/42/EC and EN 14492-1:2006 Power Driven Winches

SPECIFICATIONS :

Rated line pull :

3,175 kg (7,000 lb) SAE J706 rating

3,200 kg EN 14492-rating

Operation pressure : 110 bar / 1,595 psi

Max oil flow : 40 l/min (10.6 g/min)

Hydraulic motor : 48.6 cm³ / rev (3.0 in³ / rev)

Gear train & ratio : 1-stage worm gear 50:1

Winch construction : Aluminum die cast housings with steel drum

Clutch (Freespooling) : Worm gear disengaged

Brake : Irreversible worm gear

Rotation of winch : Wire rope shall be under-wound orientation only

Drum barrel diameter : 90 mm (3.5")

Drum flange diameter : 168 mm (6.6")

Distance between flanges : 160 mm (6.3") - Std. drum / 240 mm (9.5") - Long drum

Mounting bolts pattern :

130 x 211 mm (5.1" x 8.3") - Std. drum

130 x 291 mm (5.1" x 11.5") - Long drum

Wire rope recommended :

10 mm x 10.7m for Std. drum and 16.2 m for Long drum, 1,960N/mm² grade with a minimum breaking strength of 69.8 kN required for EN 14492-1 rating

3/8" x 57.4' for Std. drum and 87.3' for Long drum, EIPS grade with a minimum breaking strength of 15,663 lbf required for SAE J706 rating

Winch weight : 29 kg / 63.9 lb (Std. drum) ; 33 kg / 72.8 lb (Long drum)

Gross weight : 33 kg / 72.8 lb (Std. drum) ; 37 kg / 81.6 lb (Long drum)

Box dimension :

431 x 386 x 256 mm (17" x 15.2" x 10.1") - Std. drum

511 x 386 x 256 mm (20.1" x 15.2" x 10.1") - Long drum

PERFORMANCE DATA :

Line Pull and Rope Capacity				Line Speed
Layer of Wire Rope	Pull by Layer, kg / lb	Total Rope on the Drum, m / ft Std. drum	Long drum	at 40 l/min (10.6 g/min), mpm / fpm
1st	3,175 / 7,000	4.9 / 16.1	7.4 / 24.3	5.2 / 17.1
2nd	2,646 / 5,833	10.7 / 35.1	16.2 / 53.1	6.2 / 20.3
3rd	2,268 / 5,000	17.5 / 57.4	26.6 / 87.3	7.2 / 23.6

DIMENSION mm/in :

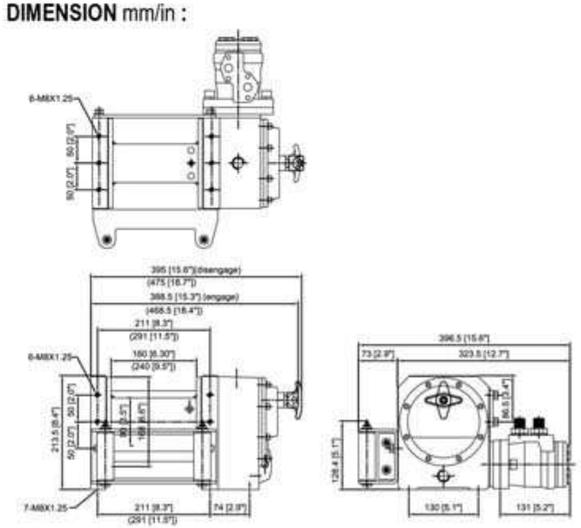

COMEUP WINCH

Electric Recovery Winch

COMEUP, as an international brand of winch manufacturer, is aiming to provide a superior product that is inherently safe to operate in all conditions by all users. COMEUP further assures that its industrial winches comply with all European Standards and Directives including but not limited to EN 14492-1, the Machinery Safety regulations and all current Health and Safety regulations. COMEUP Rhino Series winch is designed to comply the above regulation requirements that ensures maximum performance in the toughest environment and is ideal for commercial, industrial and severe duty application.

- Rhino Series 8,000 ~ 12,000 lb
- Wolf Series 8,500 ~ 12,000 lb

EN 14492-1 COMPLIANT

Rhino Series

8,000 - 12,000 lb pulling capacity

- Reliable electric winch for commercial, industrial and severe duty applications
- 10 equally positioned pin holes with a ergonomic T-handle make end housing may be rotated in 36 degree increments
- Hardened steel, 3-stage planetary gear train for efficient and reliable operation
- Waterproof remote control with thermometric LED indicator alerts when the motor is over-heated
- U.S. Germany, U.K. France, etc patented mechanical cone brake holds full load
- Over-load protector build-in the control box prevents the overloading of the winch
- Submersible sealed contactor handles high amps and allows higher duty cycle
- Standard Compliance : CE Machinery Directive 2006/42/EC, CE Electromagnetic Compatibility Directive 2004/108/EC, EN 14492- 1:2006 Power Driven Winches and SAE J706

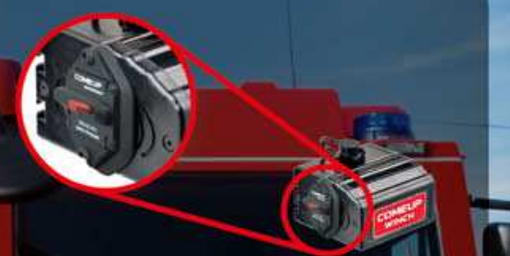

OLP (Over-Load Protector) function

The over-load protector built-in the control box designs to prevent overloading of the winch

Compliant with EN 14492-1 requirements for recovery winch :

- The working coefficient for the first rope layer on the drum shall be at least 2
- The D/d ratio to the center of the rope shall be at least 10 for the drum.
- Drum freeboard shall be at least 1.5 x rope diameter

Rhino 12

COMEUP WINCH

12,000 LB Electric Recovery Winch

Note : Roller fairlead does not mount to winch

Rhino 12 PN 851212 (12V) | PN 851224 (24V)

* Meet CE Machinery Directive 2006/42/EC, CE Electromagnetic Compatibility Directive 2004/108/EC, EN 14492-1:2006 Power Driven Winches and SAE J706

SPECIFICATIONS :

Rated line pull : 5,440 kg (12,000 lb) SAE J706 rating
5,100 kg EN 14492-1 rating

Motor : 4,180 w / 5.6 hp 12V series wound
2,690 w / 3.6 hp 24V series wound

Gear train & ratio : 3-stage planetary 315:1

Clutch (freespooling) : Rotating ring gear

Brake (outside the drum) : Automatic, full load CBS (Cone Brake Structure)

Winch construction : Aluminum die cast housings with steel drum

Drum size : 114 x 195.5 mm (4.5" x 7.7")

Rotation of winch : Wire rope shall be under-wound orientation only

Control : Waterproof remote with thermometric indicator LED and 5 m (17') cord

Mounting bolts pattern : 254 x 114 mm (10" x 4.5")
254 x 165 mm (10" x 6.5")

Wire rope recommended :

12 mm x 21.4m, 1,960N/mm² grade with a minimum breaking strength of 100.5 kN required for EN 14492-1 rating

1/2" x 100', EIPS grade with a minimum breaking strength of 22,552 lbf required for SAE J706 rating

Winch weight : 47 kg / 104 lb

Gross weight : 61 kg / 134 lb

Box dimension : 693 x 313 x 473 mm (27.3" x 12.3" x 18.6")

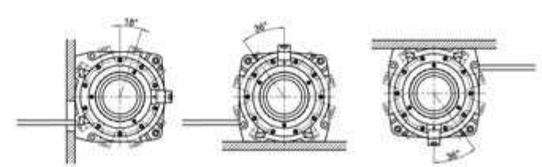

10 equally positioned pin holes ensure seamless clutch transmission and make it easily rotate by 36° Increments.

PERFORMANCE DATA :

Line Pull and Rope Capacity

Layer of Rope	Pull by Layer, kg / lb	Total Rope on the Drum, m / ft
1st	5,440 / 12,000	5.9 / 19.4
2nd	4,534 / 9,996	13 / 42.7
3rd	3,885 / 8,565	21.4 / 70
4th	3,399 / 7,494	30.5 / 100

Line Speed and Amp. Draw (1st layer of rope on the drum)

Line Pull kg / lb	Line Speed, mpm / fpm	Amp. Draw, A 12V	24V
No Load	10 / 32.8	40	35
1,814 / 4,000	4.4 / 14.4	140	110
3,630 / 8,000	3.5 / 11.5	280	210
5,535 / 10,000	1.5 / 5.0	350	260
5,440 / 12,000	1.3 / 4.3	420	310

DIMENSION mm/in :

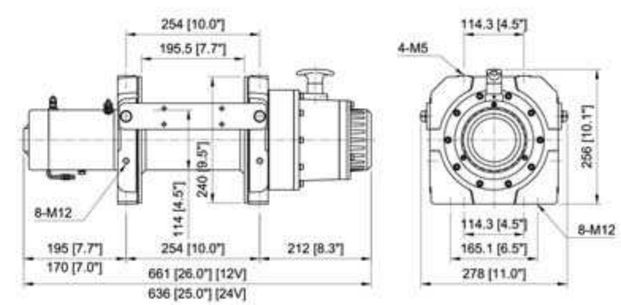

Rhino 8

8,000 LB Electric Recovery Winch

Note : Roller fairlead does not mount to winch

Rhino 8 **PN 850812** (12V) | **PN 850824** (24V)

* Meet CE Machinery Directive 2006/42/EC, CE Electromagnetic Compatibility Directive 2004/108/EC, EN 14492-1:2006 Power Driven Winches and SAE J706

SPECIFICATIONS :

Rated line pull : 3,630 kg (8,000 lb) SAE J706 rating
3,560 kg EN 14492-1 rating

Motor : 3,430 w / 4.6 hp 12V series wound
1,940 w / 2.6 hp 24V series wound

Gear train & ratio : 3-stage planetary 211:1

Clutch (freespooling) : Rotating ring gear

Brake (outside the drum) : Automatic, full load CBS (Cone Brake Structure)

Winch construction : Aluminum die cast housings with steel drum

Drum size : 90 x 205 mm (3.5" x 8.1")

Rotation of winch : Wire rope shall be under-wound orientation only

Control : Waterproof remote with thermometric indicator LED and 5 m (17') cord

Mounting bolts pattern : 254 x 114 mm (10" x 4.5")
254 x 165 mm (10" x 6.5")

Wire rope recommended :

10 mm x 22.6 m, 1,960N/mm² grade with a minimum breaking strength of 69.8 kN required for EN 14492-1 rating

3/8" x 100', EIPS grade with a minimum breaking strength of 15,663 lbf required for SAE J706 rating

Winch weight : 31 kg / 68.3 lb

Gross weight : 47 kg / 104 lb

Box dimension : 650 x 260 x 440 mm (25.6" x 10.2" x 17.3")

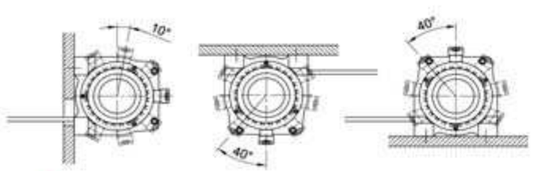

9 equally positioned pin holes ensure seamless clutch transmission and make it easy rotate by 40 Increments.

PERFORMANCE DATA :

Line Pull and Rope Capacity

Layer of Rope	Pull by Layer, kg / lb	Total Rope on the Drum, m / ft
1st	3,630 / 8,000	6.3 / 20.7
2nd	3,025 / 6,669	13.8 / 45.3
3rd	2,593 / 5,717	22.6 / 74
4th	2,269 / 5,002	30.5 / 100

Line Speed and Amp. Draw (1st layer of rope on the drum)

Line Pull kg / lb	Line Speed, mpm / fpm	Amp. Draw, A 12V	Amp. Draw, A 24V
No Load	9.0 / 29.5	45	30
907 / 2,000	3.0 / 10	90	30
1,814 / 4,000	1.5 / 5.0	180	120
2,722 / 6,000	1.0 / 3.3	260	180
3,630 / 8,000	0.7 / 2.3	340	230

DIMENSION mm/in :

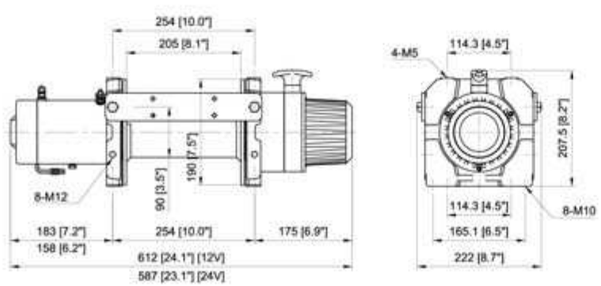

Wolf 12.0 / 8.5

12,000 - 8,500 LB Electric Worm Gear Winch

Wolf 12.0 **PN 782478** (12V) / **PN 783415** (24V)
(with wire rope, roller fairlead, remote control, cable tensioner)
Wolf 8.5 **PN 780254** (12V) / **PN 780988** (24V)
(with wire rope, roller fairlead, remote control, cable tensioner)

* Meet CE Machinery Directive 2006/42/EC, CE Electromagnetic Compatibility Directive 2004/108/EC and SAE J706

SPECIFICATIONS :

Rated line pull :

Wolf 12.0 : 5,443 kg (12,000 lb) single line

Wolf 8.5 : 3,856 kg (8,500 lb) single line

Motor :

Wolf 12.0/8.5 : 3,430 w / 4.6 hp 12V series wound

Wolf 12.0 : 2,240 w / 3.0 hp 24V series wound

Wolf 8.5 : 1,940 w / 2.6 hp 24V series wound

Gear train & ratio :

Wolf 12.0 : 2-stage spur gears PLUS worm gear, 424:1

Wolf 8.5 : 2-stage spur gears PLUS worm gear, 228.9:1

Clutch (freespooling) : Mechanism lever

Brake : Irreversible worm gear brake PLUS mechanism ratchet wheel brake

Drum size :

Wolf 12.0 : 89 mm x 229 mm (3.5" x 9")

Wolf 8.5: 82 mm x 229 mm (3.2" x 9")

Control : Waterproof remote w/5 m (17') cord

Rope :

Wolf 12.0 : Galvanized aircraft A7 x 19, 9.5 mm x 30.5 m (3/8" x 100')

Wolf 8.5 : Galvanized aircraft A7 x 19, 8.0 mm x 45 m (5/16" x 150')

Mounting bolts pattern :

273 mm x 110 mm (10.7" x 4.3") ; 257 mm x 172 mm (10.1" x 6.8")

Winch weight :

Wolf 12.0 : 41 kg / 90.4 lb ;

Wolf 8.5 : 40 kg / 88.2 lb

Gross weight :

Wolf 12.0 : 51 kg / 112.5 lb ;

Wolf 8.5 : 51 kg / 112.5 lb

Box dimension, (L x D x H) : 610 x 427 x 350 mm (24" x 16.8" x 13.8")

PERFORMANCE DATA :

Line Pull and Rope Capacity

Layer of Rope	Wolf 12.0 Pull by Layer, kg / lb	Wolf 12.0 Total Rope on the Drum, m / ft	Wolf 8.5 Pull by Layer, kg / lb	Wolf 8.5 Total Rope on the Drum, m / ft
1st	5,443 / 12,000	7.3 / 24.0	3,856 / 8,500	8.0 / 26.4
2nd	4,563 / 10,060	16.0 / 52.6	3,279 / 7,229	17.5 / 57.4
3rd	3,928 / 8,659	26.1 / 85.8	2,853 / 6,289	28.4 / 93.1
4th	3,448 / 7,601	30.5 / 100	2,524 / 5,566	40.7 / 133.4
5th	-	-	2,264 / 4,991	45.0 / 150.0

Line Speed and Amp. Draw (1st layer of rope on the drum)

Line Pull kg / lb	Line Speed, mpm / fpm Wolf 12.0	Line Speed, mpm / fpm Wolf 8.5	Amp. Draw, A Wolf 12.0 12V	Amp. Draw, A Wolf 12.0 24V	Amp. Draw, A Wolf 8.5 12V	Amp. Draw, A Wolf 8.5 24V
No Load	6.3 / 20.3	10.6 / 34.8	70	40	55	40
907 / 2,000	-	4.3 / 14.1	-	-	120	70
1,814 / 4,000	-	3.0 / 9.8	-	-	200	100
2,722 / 6,000	2.7 / 8.9	2.4 / 7.9	180	85	255	130
3,630 / 8,000	1.7 / 5.6	2.0 / 6.6	270	120	320	160
3,856 / 8,500	-	1.8 / 5.9	-	-	350	170
4,535 / 10,000	1.4 / 4.6	-	310	150	-	-
5,443 / 12,000	1.0 / 3.3	-	350	190	-	-

DIMENSION mm/in : (Wolf 12.0/8.5)

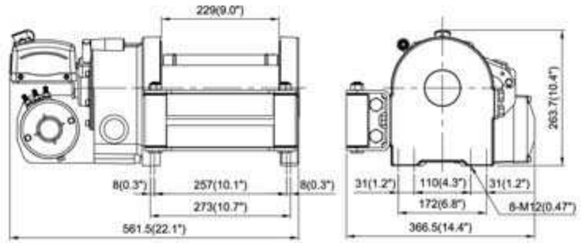

COMEUP WINCH

HEAVY DUTY HOIST

- Provides an answer to the health and safety recommendations for manual lifting
- High efficient low amp. draw and sealed permanent magnet motor
- Lightweight and compact design is ideal for easy installation
- Waterproof industrial remote control with 5 m lead
- Full metal 3 stage planetary gear train for greater pulling force
- Submersible sealed contactor handles high amps and allows higher duty cycle
- In compliance with standard of ASME B30.5 for D/d ≥ 18 and rope safety factor ≥ 3.5
- Meet CE Machinery Directive 2006/42/EC, CE EMC Directive 2004/108/EC and ASME B30.5

COMEUP WINCH

2800 LB Heavy Duty Hoist

GTD-2800
PN 753022 (12V) | **PN 753033** (24V)
PN 753002 (12V) w/o controls and rope assembly
PN 753003 (24V) w/o controls and rope assembly

SPECIFICATIONS :

Rated line lift : 1,270 kg (2,800 lb)

Motor : 2,830 w / 3.8 hp 12V permanent magnet ;
1,940 w / 2.6 hp 24V permanent magnet

Gear train & ratio : 3-stage planetary 261:1

Brake (outside the drum) : Mechanical cone brake and permanent motor dynamic brakes together

Winch construction : Aluminum die cast housings and steel drum

Drum size : 135 x 114.6 mm (5.3" x 4.5")

Control : Remote control with 5 m (17') lead

Rope : Galvanized aircraft A7 x 19, 7.9 mm x 28 m (5/16" x 92')

Mounting bolts pattern : 114.3 x 171.4 mm (4.5" x 6.8") ; 165.1x 171.4 mm (6.5" x 6.8")

Hoist weight (including rope) : 48.1 kg / 106 lb

Gross weight : 54.8 kg / 120.8 lb

Box dimension : 620 x 360 x 260 mm (24.4" x 14.2" x 10.2")

PERFORMANCE DATA :

Line Lift and Rope Capacity

Layer of Wire Rope	Load by Layer, kg / lb	Line Speed mpm / fpm 12V	24V	Total Rope on the Drum, m / ft
1st	1,270 / 2,800	4.0 / 13.1	4.4 / 14.4	6.3 / 20.7
2nd	1,144 / 2,522	4.4 / 14.4	4.9 / 16.1	13.3 / 43.6
3rd	1,040 / 2,292	4.8 / 15.7	5.4 / 17.7	21 / 68.6
4th	954 / 2,103	5.3 / 17.4	5.8 / 19.0	28 / 92

Line Speed and Amp. Draw (1st layer of rope on the drum)

Line Lift kg / lb	Line Speed, mpm / fpm 12V	24V	Amp. Draw, A 12V	24V	Percentage Duty Cycle Min / 10 min
No Load	5.8 / 19	6.0 / 19.7	30	22	Cont.
227 / 500	5.5 / 18	5.7 / 18.7	45	30	7.0
454 / 1,000	5.1 / 16.7	5.5 / 18.0	70	45	4.5
680 / 1,500	4.6 / 15.1	5.3 / 17.4	95	60	3.0
907 / 2,000	4.3 / 14.1	4.6 / 15.1	135	80	2.5
1,270 / 2,800	4.0 / 13.1	4.4 / 14.4	160	100	2.0

DIMENSION mm/in :

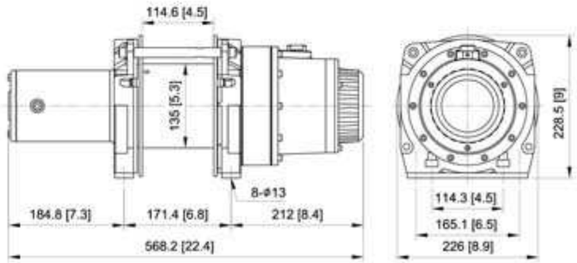

GTD-2200/1200

2,200 - 1,200 LB Heavy Duty Hoist

GTD-2200
PN 752103 (12V) | PN 752104 (24V)
PN 752003 (12V) w/o controls and rope assembly
PN 752004 (24V) w/o controls and rope assembly

SPECIFICATIONS :

Rated line lift : 998 kg (2,200 lb) ;
907 kg (2,000 lb) ANSI B30.5 rating
Motor : 2,830 w / 3.8 hp 12V permanent magnet
1,940 w / 2.6 hp 24V permanent magnet
Gear train & ratio : 3-stage planetary 211:1
Brake (outside the drum) :
Mechanical cone brake and permanent motor dynamic brakes together
Winch construction : Aluminum die cast housings and steel drum
Drum size : 108 x 105 mm (4.3" x 4.1")
Control : Remote control with 5 m (17') lead
Rope : Galvanized aircraft A7 x 19, 6.4 mm x 30 m (1/4" x 100')
Mounting bolts pattern : 114.3 x 152 mm (4.5" x 6") ; 165.1 x 152 mm (6.5" x 6")
Hoist weight (including rope) : 33.9 kg / 74.7 lb
Gross weight : 39.5 kg / 87.1 lb
Box dimension : 518 x 341 x 240 mm (20.4" x 13.4" x 9.4")

PERFORMANCE DATA :

Line Lift and Rope Capacity

Layer of Wire Rope	Load by Layer, kg / lb	Line Speed, mpm / fpm 12V	24V	Total Rope on the Drum, m / ft
1st	998 / 2,200	4.2 / 13.8	5.0 / 16.4	5.6 / 18.4
2nd	898 / 1,980	4.6 / 15.1	5.5 / 18.0	11.8 / 38.7
3rd	816 / 1,799	5.1 / 16.7	6.1 / 20.0	18.7 / 61.4
4th	747 / 1,647	5.6 / 18.4	6.6 / 21.6	26.2 / 86
5th	689 / 1,519	6.0 / 19.7	7.2 / 23.6	30 / 100

Line Speed and Amp. Draw (1st layer of rope on the drum)

Line Lift kg / lb	Line Speed, mpm / fpm 12V	24V	Amp. Draw, A 12V	24V	Percentage Duty Cycle Min / 10 min
No Load	5.3 / 17.4	5.8 / 19.0	25	18	Cont.
181 / 400	5.2 / 17.1	5.7 / 18.7	50	25	8.0
362 / 800	5.1 / 16.7	5.6 / 18.4	75	35	6.0
544 / 1,200	4.8 / 15.7	5.5 / 18	95	55	4.0
771 / 1,700	4.6 / 15.1	5.3 / 17.4	115	70	3.0
998 / 2,200	4.2 / 13.8	5.0 / 16.4	135	90	2.0

DIMENSION mm/in

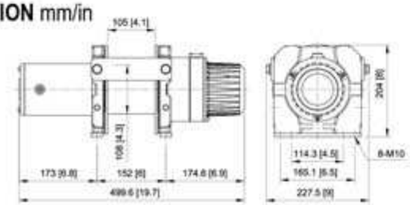

GTD-1200
PN 751321 (12V) | PN 751375 (24V)
PN 751220 (12V) w/o controls and rope assembly
PN 751265 (24V) w/o controls and rope assembly

SPECIFICATIONS :

Rated line lift : 544 kg (1,200 lb)
Motor : 900 w / 1.2 hp 12/24V permanent magnet
Gear train & ratio : 3-stage planetary 216:1
Brake (outside the drum) :
Mechanical cone brake and permanent motor dynamic brakes together
Winch construction : Aluminum die cast housing with cast iron drum
Drum size : 89 x 73 mm (3.5" x 2.9")
Control : Remote control with 5 m (17') lead
Rope : Galvanized aircraft A7 x 19, 4.8 mm x 18.3 m (3/16" x 60')
Mounting bolts pattern : 114 x 101.6 mm (4.5" x 4")
Hoist weight (including rope) : 15.3 kg / 33.7 lb
Gross weight : 20.2 kg / 44.5 lb
Box dimension : 504 x 214 x 363 mm (19.8" x 8.4" x 14.3")

PERFORMANCE DATA :

Line Lift and Rope Capacity

Layer of Wire Rope	Load by Layer, kg / lb	Line Speed, mpm / fpm	Total Rope on the Drum, m / ft
1st	544 / 1,200	5.5 / 18	4.2 / 13.8
2nd	494 / 1,089	6.1 / 19.9	8.8 / 28.9
3rd	452 / 996	6.6 / 21.7	13.8 / 45.3
4th	416 / 917	7.2 / 23.6	18.3 / 60

Line Speed and Amp. Draw (1st layer of rope on the drum)

Line Lift kg / lb	Line Speed, mpm / fpm 12V	24V	Amp. Draw, A 12V	24V	Percentage Duty Cycle Min / 10 min
No Load	7.4 / 24.3	5.9 / 19.4	30	15	2.5
136 / 300	6.9 / 22.6	5.7 / 18.7	55	19	2.3
272 / 600	6.4 / 21.0	5.5 / 18.0	75	25	2.0
408 / 900	5.9 / 19.4	5.2 / 17.1	95	36	1.8
544 / 1,200	5.5 / 18.0	5.0 / 16.4	130	50	1.5

DIMENSION mm/in

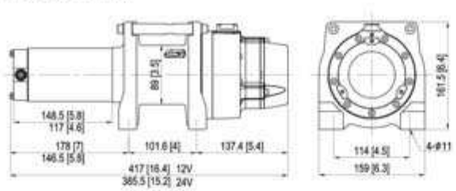

GTD-800/650

800 - 650 LB Heavy Duty Hoist

GTD-800
PN 750925 (12V) | PN 750955 (24V)
PN 750888 (12V) w/o controls and rope assembly
PN 750898 (24V) w/o controls and rope assembly

SPECIFICATIONS :

Rated line lift : 362 kg (800 lb)
Motor : 800 w / 1.0 hp 12/24V permanent magnet
Gear train & ratio : 3-stage planetary 191:1
Brake : Mechanical spring applied and permanent motor dynamic brakes together
Winch construction : Aluminum die cast housings and drum
Drum size : 68 x 119 mm (2.7" x 4.7")
Control : Remote control with 5 m (17') lead
Rope : Galvanized aircraft A7 x 19, 4.0 mm x 18.3 m (5/32" x 60')
Mounting bolts pattern : 168 x 76 mm (6.6" x 3")
Hoist weight (including rope) : 8.3 kg / 18.3 lb
Gross weight : 12.2 kg / 26.9 lb
Box dimension : 430 x 170 x 300 mm (16.9" x 6.7" x 11.8")

PERFORMANCE DATA :

Line Lift and Rope Capacity

Layer of Wire Rope	Load by Layer, kg / lb	Line Speed, mpm / fpm	Total Rope on the Drum, m / ft
1st	362 / 800	3.2 / 10.5	6.6 / 21.7
2nd	327 / 721	3.6 / 11.8	14.0 / 45.9
3rd	297 / 655	3.9 / 12.8	18.3 / 60

Line Speed and Amp. Draw (1st layer of rope on the drum)

Line Lift kg / lb	Line Speed, mpm / fpm 12V	24V	Amp. Draw, A 12V	24V	Percentage Duty Cycle Min / 10 min
No Load	3.6 / 11.8	4.2 / 13.8	20	15	3.0
181 / 400	3.4 / 11.2	4.1 / 13.5	40	25	2.0
362 / 800	3.2 / 10.5	4.0 / 13.1	55	35	1.5

DIMENSION mm/in :

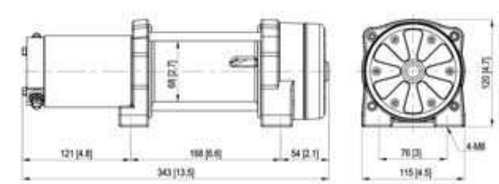

GTD-650
PN 750265 (12V) | PN 750280 (24V)
PN 750160 (12V) w/o controls and rope assembly
PN 750188 (24V) w/o controls and rope assembly

SPECIFICATIONS :

Rated line lift : 295 kg (650 lb)
Motor : 800 w / 1.0 hp 12/24V permanent magnet
Gear train & ratio : 3-stage planetary 138.5:1
Brake : Mechanical spring applied and permanent motor dynamic brakes together
Winch construction : Aluminum die cast housings and drum
Drum size : 61.2 x 75 mm (2.4" x 3.0")
Control : Remote control with 5 m (17') lead
Rope : Galvanized aircraft A7 x 19, 3.6 mm x 18.3 m (9/64" x 60')
Mounting bolts pattern : 124 x 76 mm (4.9" x 3")
Hoist weight (including rope) : 7.7 kg / 17 lb
Gross weight : 11.6 kg / 25.6 lb
Box dimension : 390 x 170 x 300 mm (15.4" x 6.7" x11.8")

PERFORMANCE DATA :

Line Lift and Rope Capacity

Layer of Wire Rope	Load by Layer, kg / lb	Line Speed, mpm / fpm	Total Rope on the Drum, m / ft
1st	295 / 650	4.0 / 13.1	4.1 / 13.5
2nd	266 / 586	4.5 / 14.8	8.7 / 28.5
3rd	241 / 531	4.9 / 16	13.8 / 45.3
4th	221 / 487	5.4 / 17.7	18.3 / 60

Line Speed and Amp. Draw (1st layer of rope on the drum)

Line Lift kg / lb	Line Speed, mpm / fpm 12V	24V	Amp. Draw, A 12V	24V	Percentage Duty Cycle Min / 10 min
No Load	4.3 / 14.1	5.0 / 16.4	25	15	3.0
147 / 320	4.2 / 13.8	4.8 / 15.7	45	22	2.0
295 / 650	4.0 / 13.1	4.6 / 15.1	55	30	1.5

DIMENSION mm/in :

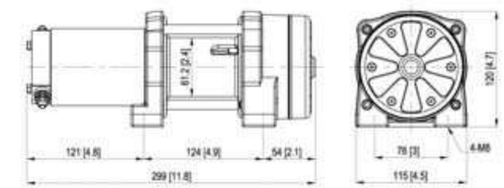

Wireless Remote Control
2.4 GHz within 27 m (90'), complete set including wireless transmitter, wireless receiver, switch cord with plug, battery and handle strap
PN 880609 RF-24A w/3 ping plug for GTD-650/800/1200/2200/2800, Wolf 8.5/12.0
PN 881262 RF-24C w/6 pin plug for Rhino 8/12

Remote Control
PN 880025 for GTD-650/800/1200/2200/2800, Wolf 8.5 /12.0
PN 880126 for Rhino 8/12 (comes with protective thermal sensor LED)

Sealed Contactor
PN 881355 (12V) / PN 81356 (24V)
400 A, for Rhino 8/12, Wolf 8.5/12.0
PN 882083 (12V) / PN 882084 (24V) 250A
contactor w/lead for GTD-650/800/1200/2200/2800

Detachable Control Box
PN 881581 (12V) / PN 881582 (24V) for Rhino 8, w/built-in over-load protector
PN 881645 (12V) / PN 881646 (24V) for Rhino 12, w/built-in over-load protector
PN 882313 (12V) / PN 882314 (24V) for GTD-650/800/1200
PN 882360 (12V) / PN 882361 (24V) for GTD-2200/2800
PN 880340 (12V) / PN 880341 (24V) for Wolf 8.5/12.0

Roller Fairlead
PN 880160 179 mm throat for HV-8 Std. drum, Bison 20/30 Std. drum
PN 880180 245 mm throat for HV-8 Long drum, HV-10/12/15
PN 883400 245 mm throat, stainless steel, for HV-8 Long drum, HV-10/12/15
PN 882481 179 mm throat for Rhino 8/12
PN 881479 149 mm throat for Yak 5/7 Std. drum
PN 881480 229 mm throat for Yak 5/7 Long drum
PN 882238 330 mm throat for Bison 20/30 Long drum
PN 882797 330 mm throat for Bison 50
PN 880023 210 mm throat for Wolf 8.5/12.0

Snatch Block
PN 881079 Max. load 10,000 kg / 22,000 lb for Yak 5/7, GTD-650/800/1200/2200/2800
PN 881082 Max. load 13,610 kg / 30,000 lb for HV-8/10/12, Rhino 8/12, Wolf 8.5/12.0

Wire Rope with Hook
PN 882323 3.6 mm x 18.3 m (9/64" x 60') for GTD--650
PN 882321 4.0 mm x 18.3 m (5/32" x 60') for GTD-800
PN 881245 4.8 mm x 18.3 m (3/16" x 60') for GTD-1200
PN 881149 6.4 mm × 30.5 m (1/4" × 100') for GTD-2200
PN 882404 7.9 mm × 28 m (5/16" × 92') for GTD-2800
PN 881239 8.0 mm x 45 m (5/16" x 150') for Wolf 8.5
PN 880106 9.5 mm x 30.5 m (3/8" x 100') for Wolf 12.0

Battery Isolation Switch PN 881097
2 Position Off-On 12V 500 Amp for Rhino 8/12, GTD-650/800/1200/2200/2800 Wolf 8.5/12.0

Cable Tensioner
PN 882796 for Bison 50
PN 881983 for Bison 20/30 Std. drum
PN 882195 for Bison 20/30 Long drum
PN 881238 for HV-8 Std. drum, Rhino 12
PN 880179 for HV-8 Long drum, HV-10/12/15
PN 881236 for Yak 5/7 Std. drum
PN 881237 for Yak 5/7 Long drum
PN 881667 for Rhino 8
PN 880358 for Wolf 8.5/12.0

Air Clutch
PN 880181 for HV-8/10
PN 882352 for HV-12/15

Extended Clutch Kit
PN 881314 for HV-8/10
PN 883386 for HV-12/15

Over Center Valve
PN 883314 70-210 bar setting for HV-8/10/12/15

Winch Accessory Kit
Heavy Duty Kit PN 883438
Designed for winch single line capacity to 6,803 kg / 15,000 lb
Includes:
- 13,610 kg / 30,000 lb maximum capacity snatch block, PN 881082
- 100 mm x 2.4 m (4" x 8') tree trunk protector strap, PN 881091
- 75 mm x 9 m (3" x 30') recovery strap rated to 9,800 kg/21,600 lb, PN 881090
- Bow shackle, 33 mm (3/4") pin diameter, PN 883440
- 3 m of 8 mm (10' of 5/16") grade 70 choker chain with hooks, PN 881096
- Gloves, PN 883437
- Bag, PN 883439

Emergency Stop Switch, PN 881668 400A

Bison/HV/Yak

Series		Hydraulic Winch							
Model Number		**Bison 50**	**Bison 30**	**Bison 20**	**HV-15**	**HV-12**	**HV-10**	**HV-8**	**Yak 7**
Gear train		Planetary gears							Worm gears
Rated line pull	SAE J706 rating	22,680 kg / 50,000	13,600 kg / 30,000 lb	9,070 kg / 20,000 lb	6,800 kg / 15,000 lb	5,440 kg / 12,000 lb	4,535 kg / 10,000 lb	3,630 kg / 8,000 lb	3,175 kg / 7,000 lb
	EN 14492-1rating	-	-	9,070 kg	6,800 kg	5,100 kg	4,300 kg	3,560 kg	3,200 kg
Counterbalance or over-center valve		●	●	●	●	●	●	●	●
Roller fairlead for	Std. drum	●	●	●	●	●	●	●	●
	for Long drum	-	●	●	-	-	-	●	●
Cable tensioner for	Std. drum	●	●	●	◎	◎	◎	◎	◎
	for Long drum	-	●	●	-	-	-	◎	◎
Air clutch		built-in	built-in	built-in	◎	◎	◎	◎	-
Snatch block		-	-	-	◎	◎	◎	◎	◎

Rhino/Wolf/GTD

Series		Electric recovery Winch				Heavy Duty Hoist				
Model Number		**Rhino 12**	**Rhino 8**	**Wolf 12.0**	**Wolf 8.5**	**GTD-2800**	**GTD-2200**	**GTD-1200**	**GTD-800**	**GTD-650**
Gear train		Planetary gears		Worm gears		Planetary gears				
Rated line pull or lift		5,440 kg / 12,000 lb	3,630 kg / 8,000 lb	5,443 kg / 12,000 lb	3,856 kg / 8,500 lb	1,270 kg/ 2,800 lb	998 kg/ 2,200 lb	544 kg / 1,200 lb	362 kg / 800 lb	295 kg / 650 lb
Remote control		●	●	●	●	●	●	●	●	●
Control box	12V	●	●	●	●	●	●	●	●	●
	24V	●	●	●	●	●	●	●	●	●
Wire rope w/hook		◎	◎	●	●	●	●	●	●	●
Roller fairlead		●	●	●	●	-	-	-	-	-
Battery lead		●	●	●	●	●	●	●	●	●
Cable tensioner		◎	◎	●	●	-	-	-	-	-
Snatch block		◎	◎	◎	◎	◎	◎	◎	◎	◎

● Means as a standard accessory / ◎ Means as an option accessory